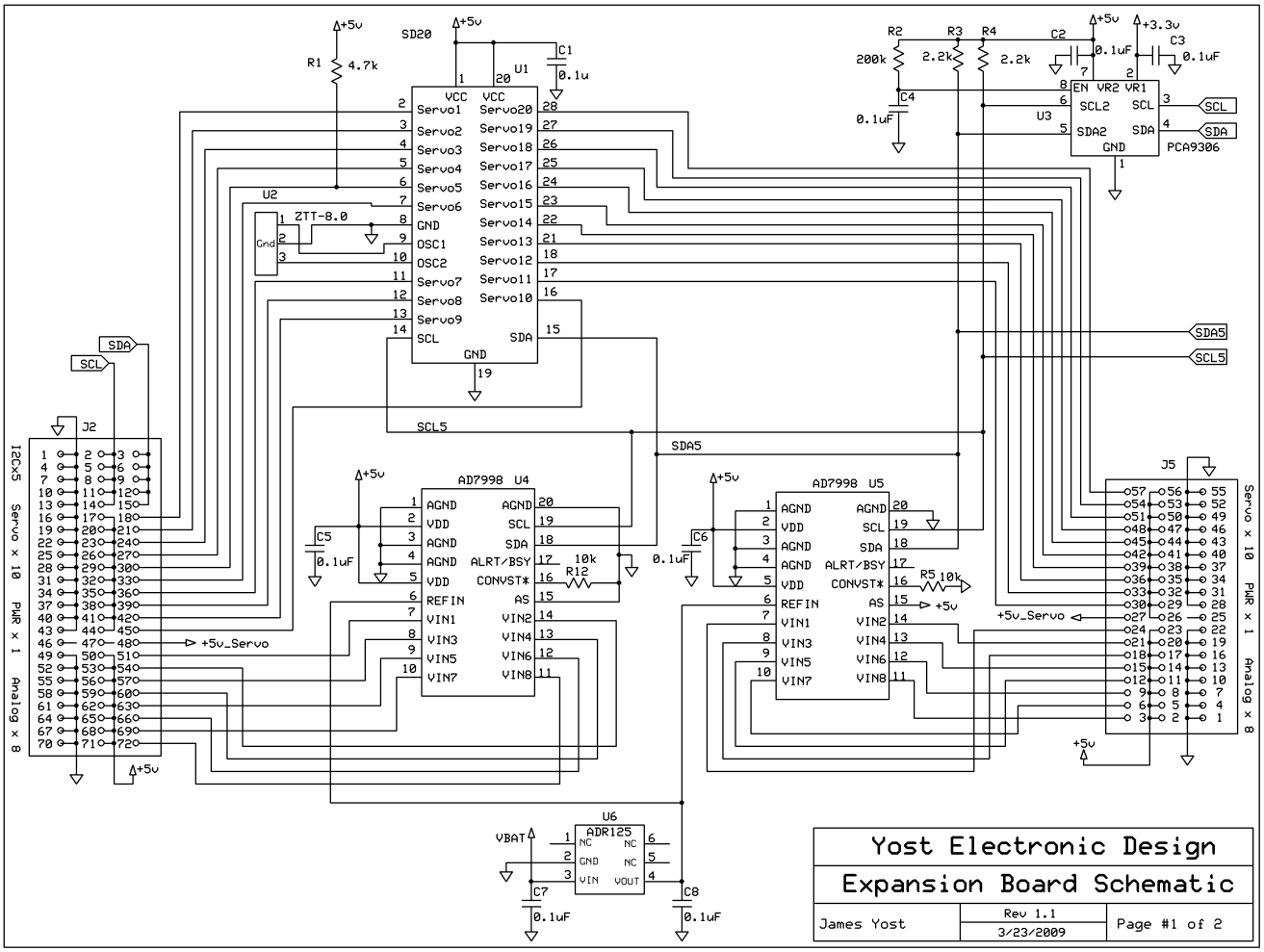
SD20
U1
VCC
Servo1
Servo2
Servo3
Servo4
Servo5
Servo6
GND
OSC1
OSC2
Servo7
Servo8
Servo9
SCL
Servo20
Servo19
Servo18
Servo17
Servo16
Servo15
Servo14
Servo13
Servo12
Servo11
Servo10
SDA
U2
ZTT-8.0
R1 4.7k
C1 0.1u
R2 200k
R3 2.2k
R4 2.2k
C2 0.1uF
C3 0.1uF
C4 0.1uF
U3
EN VR2 VR1
SCL2
SDA2
PCA9306
J2
12Cx5 Servo x 10 PWR x 1 Analog x 8
+5v_Servo
AD7998 U4
AD7998 U5
C5 0.1uF
C6 0.1uF
R12 10k
R5 10k
J5
Servo x 10 PWR x 1 Analog x 8
U6
ADR125
VBAT
C7 0.1uF
C8 0.1uF
Yost Electronic Design
Expansion Board Schematic
James Yost
Rev 1.1
3/23/2009
Page #1 of 2

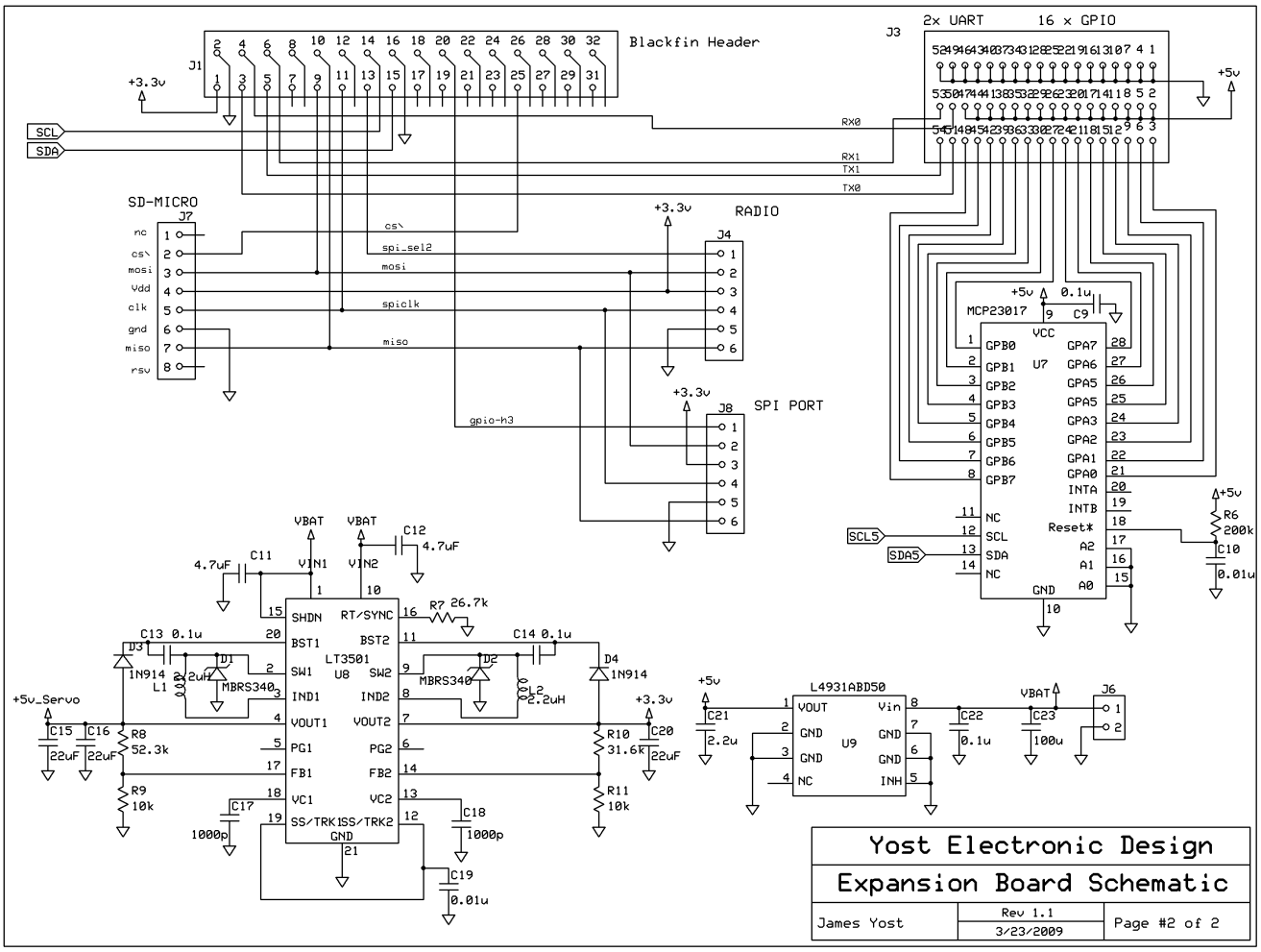
J1
Blackfin Header
J3
2x UART
16 x GPIO
SD-MICRO
J7
nc
cs\
mosi
Vdd
clk
gnd
miso
rsv
RADIO
J4
spi_sel2
spiclk
J8
SPI PORT
gpio-h3
MCP23017
U7
GPB0
GPB1
GPB2
GPB3
GPB4
GPB5
GPB6
GPB7
GPA7
GPA6
GPA5
GPA3
GPA2
GPA1
GPA0
INTA
INTB
Reset*
A2
A1
A0
C9 0.1u
R6 200k
C10 0.01u
RX0
RX1
TX1
TX0
SCL5
SDA5
C11 4.7uF
C12 4.7uF
VIN1
VIN2
SHDN
RT/SYNC
R7 26.7k
LT3501
U8
BST1
BST2
SW1
SW2
IND1
IND2
VOUT1
VOUT2
PG1
PG2
FB1
FB2
VC1
VC2
SS/TRK1
SS/TRK2
GND
C13 0.1u
C14 0.1u
D1 MBRS340
D2 MBRS340
D3 1N914
D4 1N914
L1 2.2uH
L2 2.2uH
C15 22uF
C16 22uF
R8 52.3k
R9 10k
R10 31.6k
R11 10k
C17 1000p
C18 1000p
C19 0.01u
C20 22uF
+5v_Servo
L4931ABD50
U9
VOUT
Vin
GND
INH
C21 2.2u
C22 0.1u
C23 100u
J6
Yost Electronic Design
Expansion Board Schematic
James Yost
Rev 1.1
3/23/2009
Page #2 of 2